Buried Secrets
SKYFALLEN

An Adventure for the role playing game
Operation: Fallen Reich

4Eyes!

© 2020 4Eyes Roleplaying

SKYFALLEN

An adventure for the role playing game Operation: Fallen Reich

Written by:	Totte Alm
Editing and Layout:	Totte Alm
Maps:	Totte Alm
Figurine Image:	Elmar Buchner
Playtersters:	Carl Bertil du Rietz
	Emil Falk
	Torbjörn Alm

This adventure was a special occasion as it was written for, and played with Torbjörn Alm. my father, for his 80s birthday. The game session was a little special as it was an all-inclusive session, with champagne, British posh nosh afternoon tea sandwiches (for lunch) and of course a two dish Indian curry for dinner. I like to thank Emil, Carl Bertil and Jesper for making this a memorable game session for my father. Not every day you have three generations of the same family at the game table.

- Totte Alm

Adventure Synopsis

The characters get invitations to a special occasion at a location just North of Southampton with instructions to pack for a three week journey to warmer latitudes.

They will be travelling by ship to India, via Aden, where they will have a random opportunity to pickup some crucial information for the mission.

While on the ship, the will meet the young French man whose wife has been kidnapped for a ransom by an Arab in Aden. If the characters decide to help him, they will gain some vital knowledge and also learn some **Lock Picking** skills.

Adventure Start

Friday, April 30, 1937

You have all received a telegram, which bare the very keys of coming from the organisation you all are a part of.

Invitation
Openly Friendly Reception

You have been invited to attend a reception at the Chattenborough House, Eastleigh, Monday May 3 at 3 p.m. for afternoon tea. Tea will be served at 7 p.m. Overnight is compulsory, pack for a three-week trip to warmer latitudes.

Transportation will be arranged, please contact my head of staff, Oscar Framham - Rowlington, Eastleigh 127 to make travel arrangements by telephone.

Yours sincerely
Lady Winterbottom - Stokes

GM Note

An **Orientation 5** to realise that the location is about 3 miles north of Southampton.

The characters are as stated free to use any means of transportation, but the organisation will arrange it unless they decide to handle those matters themselves, on an individual basis.

Monday, May 3, 1937

When you arrive here either by train to Southampton and picked up by a driver, or by car directly from any place within 100 miles from Eastleigh, or by your own mean, you see a magnificent old by surprisingly well kept traditional British estate. All drivers wear perfect 3 piece suits and derby hats and are middle aged gentlemen with a stiff upper lip and not at all very talkative.

Upon arrival, you are all greeted by a Majot Philip Mayworth, and a servant will escort you to your rooms, reminding you all that afternoon tea will be served in the Victorian wing at 3 p.m.

Afternoon tea

You are all welcomed by a lady in her seventies, but she is both sharp and intelligent looking and she smiles at you and greet you by name and title. The table is made and you have assigned seats, on one side of the table.

When you all have sat down, another person enters the room, a man in his mid sixties, with a big white walrus moustache. He introduce himself as Lieutenant Colonel William Forester, head of the O:FR India section and he begins to talk:

- "*First I want to thank Lady Winterbottom - Stokes for generously letting us use her estate for this meeting. Her late husband, my mentor and commanding officer during the great war, General Winterbottom, would have been pleased to know that his wife does what she can for the good of the Empire.*

Second, there has been a development in India, in the Assam region, that has come to my attention from the local authorities, that believe this is something that is best handled by this organisation. I have very little information, but what I have learned so far is that something or someone is turning the peaceful Buddhists in the region to mindless monsters, that are attacking both the Hindi and the Muslim minorities and the British troops and families living in the region. Tension is building up fast, and we cannot in times like this risk the outbreak of a civil war in the region.

You will sail tomorrow morning with the SS Ranchi from Southampton to Calcutta via the Suez Canal and a two day stop at Aden for loading and off loading cargo. The journey at sea to Calcutta will take about three and a half week. From Calcutta to Tezpur on a river streamer. Tezpur is the city closest to the reported problems. The river steamer is another two and a half week day ride, and I am not jealous of you going for a nice little holiday trip.

As you know, Burma was separated from the Indian territories just a month ago, on April 1st, a move to try to dampen the Burmese independence movements, but these recent activities shows that something is doing the opposite, in India though, but still the Buddhists.

You can make some late minute shopping in Southampton today, transport will be arranged, you will have time for some shopping in Aden. We will send your measurements to a tailor I personally know in Aden, so hopefully your will find that fitting.

Now, don't let the talking get in the way, enjoy the tea and scones, and in 30 minutes the drivers will take you to Southampton. As written on the invitation, tea is served at 7 - p.m. And, I was about to forget, no letters or telegrams to be sent to reveal the nature or destination of this journey, it has to be kept secret.

One more thing, my mind is slipping sometimes, your contact i Tezpur is at the Tezpur Colonial Police Force, D.I. Andrew Poole, he will be expecting you."

Shopping in Southampton

You arrive in Southampton's more posh shopping district at 4.16 pm. Clothes and almost any other gear, including large travel cases are possible to purchase, at the expense of Lady Winterbottom - Stokes account, as long as the stores and shops visited are on her list.

The cars will return at 17.30 sharp, for the 15 minutes drive back, leaving 15 minutes for changing into suitable dinner attire.

Tea at seven p.m.

The dinner is very good, and holds a high standard, even with international measures, Lady Winterbottom - Stokes is a one talkative lady, and she seems very knowledgeable about British foreign politics and the state of the world. Germany and the little man with the moustache is a returning subject.

May 4 - travel day

Travel times
Southampton - Aden 12 days
Stops: Lisbon - Alger - Tunis - Alexandria
Each stop is 4 hours

Aden - Calcutta 11 days
Stops: Bombay - Ceylon
Each stop is 8 hours

Calcutta - Tzepur 18 days in river steamer
Daily overnight stops at small hotels and hostels.

While at sea

Spending quality time while travelling. When having time, a lot of time, characters can spend time helping each other to train at skills. The tutor needs to have at least 5 levels in the skill in question, and also needs have at least 5 higher than the pupil. The time frame is 5 days of at least 6 hours hard practice every day, and the result is that the pupil gain 1 experience point in that skill. This is a good way to train skills with zero skills points to raise them from -5 to 1.

Remember that there must be a practical way to train the skill. For example, driving or motorcycle can be very difficult to train aboard a ship, different aiming skills too, except throwing, but don't litter the ocean and you might run out of empty beer bottles faster than you think.

As always, the GM has the last word in what training is possible or not. Fencing might be ok, surgery not so much. If the tutor has the skill **Instruct** and roll a successful **Instruct** with the difficulty of the skill level the pupil will gain, the time needed is cut by 50%.

Part One - Southampton - Aden

The ship is large, and has very comfortable cabins, and the group all have first class tickets. The routines on board are strict, breakfast, lunch, afternoon tea, tea and nightcap. Relax in the reading room or smoking room. At the stops there is a chance for a quick leg stretcher but not more. The days goes by slowly.

The mystery

On the third day, one of the characters will notice that someone has been stealing money, and it was not during housekeeping, as the money was there when the PC came back after breakfast.

This is the young Frenchman, Jaques Matesse, age 23, who is desperately trying to get money to pay ransom for his kidnapped wife. Any trap set by the characters will catch him and he will not only give up directly, ut also tell them his story. When caught, he will say, in broken English: -"*Je me donne, I yield, I surrender. Please don't hurt me. Listen to what I have to tell you. I am desperate. My wife has been kidnapped by an Arab in Aden. We stopped there for a few days, we were going to Ceylon, and change ship there to a ship to Indochine. I have just been hired to work in Indochine.*

Dacord, In Aden, we went to a bar me and my wife, which had a casino, I am good at cards, so I though I would make a few francs, or pounds, to give my wife a small cadeux, un present, a gift. I played and won small, a shilling or two. Then I got 3 Aces, and a 10 and an 8, eight of hearts, I remember. I changed the 8, and got a knight. Three aces, I bid all I had, but one guy stayed in the game, he called me, and he had, four eights, yes, he had the 8 of hearts as well. Then I realised the game was rigged, but to late. The kidnapped my wife and demands 500 pounds in two weeks, which is when this ship comes back to Aden, or they will kill her. I am supposed to leave an envelope with the money, or an ancient item of art of at least that value, at a hotel for as a message for a certain room. And no police, or they will kill her. The man, an Arab with an eye-patch over his left eye, said I have two weeks, or he would slit her throat himself."

Jaques Matesse looks around at the characters: -"*You do look like a group that will not leave a woman to be killed by a greedy arab cardsharper because her husband tried to give her un cadeux. Can you please help me? Please? I love my wife Simone.*"

If the characters hesitates, he continues:

- "*I took a free ride back to Alger from Aden to try to contact the French government, but they refused as I did not want to go to the police, so I was left on my own and decided to try to use my profession to get some money. I know it is wrong, but please, will you help me? I am a trained locksmith, so opening these locks was simple. If you help me to get my wife back alive, I promise I will teach one of you some of the basic tricks of the trade.*"

Hopefully the characters now agree to help him. The rest of the journey goes quiet and peaceful.

Aden

The weather is horrible dry and hot, and an **Endurance 5** is required whenever physical activities are required, unless the character has spent a long time in this kind of climate and knows how to handle it, drink lots of water, stay out of the sun and other painfully learned words of wisdom.

Well in port, there is a 48 hours stop for loading and unloading, and the characters do have a tailor appointment to make, and they will be booked at the Charlton Grande Hotel.

The ransom exchange

If the characters agreed to the Mr Mattesse, this is what will happen.

The instructions said that Mr Matesse should leave the ransom as a packet for room 313 at the Excelsior Hotel, then sit in the lobby and wait, and he should absolutely not leave the lobby.

At the hotel, after he has left the package for room 313 (which is a room that do not exist in the hotel), they wait for about 20 minutes before an Arab man, without an eye-patch, enters the lobby and walk and collects whatever the Mr Matesse left.

GM Note

Use the Aden GM map to describe the path the Arab is taking.

The man the walks out and crossed half the town, in a north-west direction, talking small alleys and main streets. He finally comes to the less dense outskirts of town with smaller houses, where he walks to a house and rings the doorbell.

When the door is opened by another Arab, he hands over what he picked up at the hotel. After a short while a fair skinned young woman with brown hair in dirty clothes comes out and the man starts to walk in the direction he came from, towards the hotel retracing the route he used to go here.

The house is small one story flat roofed building with a front and back door. If under surveillance for a few minutes, three people can be seen. The man opening the door, another man, and a third elder man with an eye-patch over his left eye, all three are Arabs.

The ransom house in Aden

Map legends:

Ground floor

(1) The front door opens outwards. The hallway, leading to a double door and a hallway. The smell of garlic and other Arabic spices is very strong.
(2) The stairs leading down to the basement.
(3) The Kitchen.
(4) Master bedroom.
(5) Toilet.
(6) Closet
(7) Guest bedroonm, has two beds.
(8) Dining room.

Basement

(9) The backdoor, leading to a corridor that has a staircase ion the end.
(10) storages, messy, full of junk, nothing valuable here
(11) Abu Abn Hazid's private collection

Abu Abn Hazid - illegal card game runner and collector of strange things, armed with revolver.

Abu Abn Hazid is found in the basement, in a room with a large glass cupboard along one wall, and lot of strange things in it, daggers, swords, crucifixes, figurines, and also a worn leather bound note book together with a small leather pouch.

An Art 10 to spot 1D6 items that are of value for anyone knowing are or is collecting art, and of course museums. GM decide what kind of items and their value. It can be, daggers, small icons, jewellery or other precious items. The value of each item is 3d6 * 100 pounds.

The book has the name Dr. Johann van Prytz written on the cover.

Myths or History 10 or Archeology 5: Johann van Prytz was a Dutch Archeologist that disappeared without a trace somewhere in the Asia in 1923, He was specialising in the history of the pre historic religions in Asia and he was known to have had found proof of prehistoric religions in Asia, predating Buddhism and Hinduism by several thousand years. The leather pouch contains five small carved Buddha like figurines, about 2" tall, in different materials. The materials are Gold, Bronze, Silver, Platinum and a Dark Iron like materials. They all have a little swastika, the sun symbol, on the chest. The dark iron one, Observation 5, seems to be made from some strange metal. Chemistry 10 to figure out that is not Iron, and it's very strange, almost out of this world. Observation 10 to realise that it breaks very easily, which can be seen as it has been chipped in several places.

Studying his notebook (Info Searching 15 or Archeology 10) for 48 hours.

- The Black Prince, an about 2 feet tall Buddha like statue in a black iron like material, the same material as the small black figurine, is estimated to be about 12 000 years old, predating both Buddhism and Hinduism.

- The small figurines are small figurines that look a lot like the Black Prince. The black one is made from the same material as the Black Prince. They very found in the areas of Northern India or North West Burma.

- The Black Prince were used in strange rituals involving human sacrifices, to give a chosen person inhuman strength and powers. The rituals are not described in detail enough to copy them, but they are described with enough detail to understand that they are not nice and peaceful.

Visiting the Tailors

Clothes have been ordered in colonial style, the fit is good but they do look a little dated, about 50 years or so.

The journey continues

While at sea, the wind and the sea will keep the climate bearable. If they PCs helped Jaques and Simone Matesse, one of the characters can after some days of hard and intensive training add +4 to the skill in Lock Picking. The ship will stop at Bombay and then Ceylon, where Jaques and Simone Matesse disembark., and then finally arrive at Calcutta.

Calcutta

This big, crowded, hot, humid and rather smelly city will hit the characters like a running train. Any character not used to this climate, either born in India or have been stationed here for a longer period of time, will need to make an Endurance 10 check whenever any form of physical activity is to take place. A failure meaning the physical activity might have to be done at some other time. For every day the characters are in India, the Endurance check required is lowered by one until they ha acclimatised to India, which takes abut ten days. Still any hard physical activity will still require an Endurance roll of 10, like running for more than a few minutes. Eating anything from an indian restaurant that has not been properly cooked for a long time, like fresh vegetables, or drinking plain water, not beer or anything which has been disinfected by alcohol will require and Endurance 15 or the character will suffer from severe tourist tummy for 3d6 hours. Anyone used to the conditions in India is immune to that too.

The river streamer docks are about a mile from the large sea docks, and getting there with luggage can be a pain unless you know your way around and hire a few porters and a few pulled Rickshaws.

The River Steamer Brahma

The Steamer takes 20 passengers, but the cabins are rather small and uncomfortable. But do not despair, sleeping will be done on different hotels along the river as sailing by night on the river is too dangerous at several stretches. Lunch will be served on board, rice and different variations of curry. The journey will take about 18 days, give or take, a little depending on weather and winds.

it is boring, but time for reading, and books can be borrowed at the hotels library service and returned at another hotel, but the books are mostly rather boring and old. There are also chess, checkers and other board games on the river steamer to help pass the days. The time can also be used for training.

The closer the characters comes to Northern India and the Black Prince (which the do not know of course), the character having the small figurines in his cabin, will notice that they sometimes makes buzzing sounds, or chiming, like they suddenly bump into each other, metal hitting metal. Observation 15 to hear this. The character will also experience strange dreams in connection with this., dreams about fires and sacrifice altars, with humans on them, often someone close, like a loved one or a friend in the dreams.

Event - the 8th day of travel.

When the characters comes to yet another small Indian hotel for a dinner and a nights sleep, the portiere has a really ugly black eye, that seems to be reasonable fresh (diagnose 5 to see that), just three or four days old. If they ask about it (charm 10), he will say that three days ago, a group of foreigners together with a rather unsympathetic Brit stayed here as they also went by river boat north bound. When I said to the Brit that "*That German fellow Adolf is a real prick*", the Brit gave me a fist in the face."

If the characters ask about those visitors, they will learn that the Brit, whose description fits rather well on Sir Peter Talbot . An arrogant brit with a large moustache and a very bad attitude. He travelled together with four other foreigners, all men, that spoke a weird language. They stayed here over the night.

If the characters asks to look at the rooms they hired, a **Searching 15** will reveal a crumbed piece of paper, the hotel note paper it seems. If they use the classic pen shadow on the note block in the rooms, they will see the same message.

The message, in German, translated to English reads as follows:

"*We have to watch out. We cannot thrust the Tommy, his temperament will be our doom. We have to get rid of him when we have found the Prince. / Hans*"

If the characters asks at the hotels or guest houses the stay the nights in, they will learn that the Germans had been either there or if they ask around, in another hotel, three nights ago.

Event: 11th day of travel:

Suddenly people starts to shout on the steamer, and an Observation 5 to spot the lifeless body, dressed in a tropical suit, that floats close to the shore, stuck in the reed. The captain call stop in machine, and a lifeboat is set with a few seamen to recover the body. The area is very desolated, not a human in sight , only forest and rice plantations, but no people. If a character wishes to be with the rescue team, a Charm 10 to convince the captain that that is a good choice.

GM Note:

The other Germans, Phillipp Niedermeyer, Rupert Hautzig and Siegmund Kehrer told Sir Peter about Hans letter, and they decided to get rid of him has he put the whole expedition in danger. The killed him in the evening and dumped him in the water from the docks, and the stream moved the body about 4 miles before it got stuck.

Weather someone travelled with the rescue team or not, there will be a chance to convince the captain that the characters will need to commit a medical examination of the body. Politics 10 or Law 10 to prove the point.

The body is a European Male, mid forties to mid fifties, grey-blue eyes, short blond hair and clean shaved. The clothes and shoes are modern, and of a German brand. Diagnosis 5 or Autopsy 5: The neck has been broken and is the cause of death.

Pick-pocketing 5: To recover the mans wallet and passort before anyone else get a chance to see it. if not, his name will be in the upcoming Police report.

His passport says his name Hans Wiesner, age 49, resident of Munich.

In the evening, in yet another small Indian town with a very hard to remember name, Balidhari, the Captain will call the Police to inform them about the gruesome finding in the river. A Law, Politics or Charm 10, to convince the Captain that this has to be handled carefully to prevent media or rumours. If the characters comes up with a good plan for moving the body off the river steamer, and successfully convince P.S Vihaan Tipanis that this must be kept from the press with Law, Politics or Charm 10, the Germans will not be notified that their killed traitor has been found in the river.

If the characters now asks about the foreigners, they will learn that one Brit and three other foreigners had stayed three nights ago.

Tezpur - final destination

At the evening of the 17th day, the rather big town of Tezpur id finally reached. If they ask around, there are lot of things to learn

Meeting D.I. Andrew Poole

The Tezpur Colonial Police Force main station is a beautiful building in all it's colonial glory. A large three story building on a large green and perfectly trimmed lawn, surrounded by a low stone wall.

Inside, the air is hot and humid and D.I. Andrew Poole's office is no exception. The man, in his early fifties looks like he has enjoyed colonial life a little too much. His rather red nose give away a few leads to a life of too much Gin and Tonic. When then character's arrive, he asks of anyone wants a little G'n'T to protect them against malaria? Terrible critters those mosquitos, terrible indeed.

He then starts to talk and show a pile of folders and papers.

Most of these attacks have been done by men from the south side of the river. They have all been dressed like monks, but instead of yellow, orange or red cloaks, they wore black cloaks. We have rather incomplete registers of the people here but we have tracked down a few and found that they were all from small villages, often far away, and not known to be particularly religious or fanatic. We also have a long list of missing persons, which complicates things even more. What makes this whole business even worse are the police reports where several police officers have reported that they have fired multiple times at the target, hits confirmed by multiple entry and exit wounds, but the target has kept going, attacking people with a Kukhris or other traditional Indian blades.

They victims have all been Hindi, Muslims or British citizens.

Asking about the Germans (**Charm 10**) 3 hours of work:

-They will learn that a party of one Brit, a very arrogant one, accompanied by three other foreigners, probably Germans or Dutch, arrived with a steamer three days ago and stayed the night. They left early in the morning, on foot, with backpacks alongside the river. A Jolly result will also learn that they took the south side, and they had hired two guides.

Asking about the area:
- Asking people (**Charm 15** or **Myths 10**) 4 hours: - There are several old and forgotten tempels hidden in the jungle and the mountains there
- Asking about the area (**Charm 10**) 2 hours: - That is dangerous terrain, lot of dangerous animals, snakes and insects. A Jolly result: You can always hire a guide.

Researching "The Prince" or "The Black Prince":
- **Myth 10** + **Info Searching 10**: 8 hour task at the central library, needs to be able to read Sanskrit :
According to the legends, there was once a small statue of a prehistoric Prince, before the time of Buddha. That statue could give someone inhuman powers and strengths, at the cost of human sacrifices.
- **History** or **Religion 10** + **Info Searching 10**: 8 hour task at the library and at the Tezpur Academy of education: The Black Prince is by some said to be the raw model for the Hindi god Cali.

Showing the small figurines.

If the characters shows the small figurines to anyone who is Buddhist or Hindi, they will make a muffled scream and hastily move away and flee. As they are all look very much like the Black Prince, and the Black Prince is known to be evil, anyone carrying these will be treated as the devil.

Asking about temples on the south side:

- **Charm 10 or similar** - 4 hours task: - A man you meet, and who you buy some tea and biscuits, and some food, tells you this: "My neighbours brother has been talking about a new temple, with powers to drive the Brits out of India and Burma. Sadly, me disappeared several weeks ago, and no one has heard from him since. He never said where it was, he was afraid the Brits would find out, and attack it, but I think it was close to Anjuk Pani, as he used to visit his aunt there. I would say its about 65 miles from Tezpur, hard walk, not for the weak. The missing man is Aman Bhata and his uncle is Satya Padhi.

On the road to Anjuk Pani

First, the characters needs to fins a guide, a good guide. There are so many persons that are willingly to work as a guide, but successful Judge of character 15 (characters needs to figure this one out) to see i anyone willing to make money is any good. There are a handful of guides that have been payed by the Germans to mislead anyone following them, a Judge of character 10 to spot that. After the characters have hired a guide or two, and maybe a few porters, they may be ready to take a small boat to cross the river to the south side.

On the south side, there are a fairly decent road, with Northern Indian standards, that leads through the forests and across fields in the direction of Anjuk Pani. The journey will take about three days, and nightly rest will be in small guest houses along the road.

The first two days are eventless, except the fact the surroundings have more hills and even higher terrain is in the distance. If the the characters either hired a bad guide or a guide payed off by the Germans. An Orientation 10 at the end of the first day, unless someone got suspicious earlier, will reveal that the journey has gone more south west than south east.

A Stormy night

Ant the end of the second day, the clouds gather and a rainstorm is eminent, thunder clouds gives bad feeling about the coming night, if they hurry they might just get a roof over the head in the nick of time. An Endurance 5 is required to give that extra push needed to avoid the rain, which when it comes, is worse than anyone that has one seem British rains ever seem.

If the characters has brought the figurines with them, they will all wake up in the night after a horrible nightmare, characters and guides alike. The guide will call upon the gods to save them, and they will hastily leave the characters. The nightmare, everyone had the same one, was very intense, and about death, blood, and unspeakable horrors in a deep cave, were, in the center, a large statue that had to be the Black Prince stood.They could all feel how it tried to reach inside them, trying to possess them, chasing your their now soul to send to hell for internal tormenting.

In the morning, the sun can barely make itself visible though the thick layers of clouds, and even though the rain has stopped, the world around is a soggy mush of mud, making walking both tiresome and unpleasant. The hills are higher and the mountains covered with dense forests are all around.

GM Note: *If there is a lot of time left and the adventure has been a cakewalk so far, toss in this event, otherwise just let it pass.*

Event: The madman

When the group is passing yet another wet forest on the moddy excuse for a road, a group of buddhist monks in red clothes come walking in the opposite direction. Suddenly they move sides, and from inside the group comes two monks, wearing black clothes, with frenzied looks on their faces, wielding Kukrhi knives, dashing towards the characters while the monks scream in fear.

Two Possessed monks, have simple fallen stats, 30 toughness,100 HP, blades 6 Kukri +3

Anjuk Pani.

Around afternoon, the characters finally reach the town of Anjuk Pani. Finding Satya Padhi, the uncle of the missing man, is not that hard, a 2 hours task with Charm 10 will do it. Asking around might catch the attention of some friends of the Dark Prince followers, on an Oh! Dear roll.

Asking about the Germans, **Charm 15**, will reveal that they have not passed through here.

Mr. Satya Padhi lives on the north side of the town, a town that has about 200 people, so it is rather small, even with British measurements. he is a man in his late 50s, and he is so worried about his missing nephew, Aman Bhata. A Charm 10 to comfort him and make him talk.

- "*Aman used to come here as he was heading to that new temple, the temple in the caves. It is in the caves to be safe from the British eyes. He talked a little about it, so I can guess where is it located, it must be in Shaitaan Ka Munh, "The Devil's Mouth", it's about half a day of walking. The things he told me, that they had discovered the Black Prince, the most evil symbol of all, scared me. I tried to make him stop, I really did, but his mind was so set on it, he just refused to listen, but still he came here every time he went there. He went there several times for about a half year before he vanished. If you need a guide, I will help you. I am a Buddhist, but what they teach there is not Buddhism. I fought for the British in the Great War, in Gallipoli, and I promised never to raise arms against another man ever again, but this is personal.*"

Mr Padhi opens a cupboard and takes out an SMLE Number 1 and a box of .303 British cartridges.

-"*This is friend from the Gallipoli, the only friend I have left. I've kept her in good shape, I was an excellent marksman in those days, but age and illness has come, took my wife from me too early, she passed away last year, and now it took my nephew, I have nothing too keep me from doing what I should have done a long time ago, when the first rumours about the new temple started to circulate. I know the area, we played there as kids, I was born and raised here, and I'm prepared to die here, for something I believe is right, not like all my friends that died in Gallipoli for something they did not understand. I lead the way. Are you ready?*"

If Mr Padhi is shown the figurines, he will say "*The have to be destroyed, they are very evil, and will bring doom upon us all*". He will take them to his backyard, put them on an anvil, a

nd smash them into dust with a sledge hammer. Every time the hammer hit a metal shock wave pass through the mind of the characters.

Shaitaan Ka Munh, "The Devil's Mouth"

Without Mr Padhi it would be difficult to find the best way to approach the temple. To even find the temple, ti would require an Orientation 25. Still, without Mr pad, the characters would never find the secret higher cave entrance.

The cave have two main entrances. The main entrance (1) leads to a wide and two yards hight stair case (4) roughly cut in the cave that lead down to the floor. The side entrance (2) goes below the first and enters the cave on the ground floor (6). The secret entrance (3) starts higher up and leads to a small alcove about 8 yards about the ground (6). In the center of the cave is a narrow crack that seems to go all the way out as a thin slit of sunlight (daytime) comes in.

In the cave is a ceremony ongoing. The cave is dimly lit by the light from flickering lit torches. In the middle, and a shallow bowl cut into the rock it self, sits an about 3 feet tall black figure, that looks exactly like the small figurines. In a circle about 5 yards from the bowl in the middle are five metal pillars, about two feet tall, in Gold, Bronze, Silver, Platinum and a Dark Iron. On each pillar sits a monk, dressed on a red coloured cloak, with a knife in his hand. They are all chanting and singling. From each pillars, shallow channels have been caved in the stone, all leading to the central bowl. An Observation 15 to notice that the cracks and the bowl seems to be covered in dried blood.

The character carrying the figurines, or if they have ben slit, ever character having a figuring, feel a sudden urge to toss down the figurine onto the pillar of the metal the figurine is made off. The metal attack is a 1D20+4 against targets Aura + 1D20, a failure will make the character start to pickup the figurine from what ever pocket it's stored in.

Suddenly, from a monk in a black robe appears. Depending on where the characters at at the precise moment, he will arrive at this locations:
Characters at (6), he will arrive at (5)
Characters at (5), he will arrive at (4)
Characters at (4), he will arrive at (5)

The monk moves forward to the black metal figure in the centre and the chanting rises. The monks on the pillars starts to do a strange knife dance, sitting on the pillars. If any characters cast a figurine, and it hits (**Throwing 15**), there is a flash of lighting, and the monk on the pillar falls down, and a beam of energy sees form between the pillar and the figure.

Now, one of the monks slits his own throat with the knife and dies, and the blood starts to slowly form a small steam, running slowly towards the black figure. Now, when you thought it could not be worse, a group of men enters from the same opening as the monk did, and one of them looks familiar by description, Sir Peter Talbot.

He has snaps a command, and the three other Germans fires on the monk in black, and the blood from the monk starts to form a small steam, pouring down In one of the other channels, and the man you know is Sir Peter laughs and walks towards the black figure, hissing "*Now I will be immortal for real!*". He tells the 3 others to shot the other monks to speed up the process. The blood will take about three minutes to reach the central bowl.

Sir Peter Talbot

Reaction: 10	Defence: 18	Toughness: 30
Pain limit: 25	Aura: 15	Courage: 35
All Physical: 5	Blades: 20	Rifles: 10
Pistol: 5	Other melee: 10	Observation: 14
Stability: 150	Archeology:18	Charm:13
Fallen abilities:		

Heal one self: At any time heal oneself by removing half of damage. 5 stability points.
Teleport: At any time, teleport up to 400 feet and the blink of an eye. 10 stability points.
Mental blow: 1d20+15 vs. targets Aura + 1d20. If successful, the target will be thrown backwards like being hit by an invisible hammer, taking the difference between the attack and defence in damage, cost: 2 stability points.

German Soldiers

Reaction: 2	Defence: 11	Toughness: 4
Pain limit: 12	Aura: 5	Courage: 12
All Physical: 3	Blades: 5	Rifles: 8
Pistol: 4	Other melee: 3	Driving: 6

GM Note

When the blood reaches the figure, it will release an very powerful fallen spirit that will replace the soul, but as Sir Peter Talbot already is a fallen, a much more powerful fallen will come. The figurine is carved from a meteorite and is a portal to the worlds of one of the most potent Fallens.

How this can be stopped?

Stop the blood or destroy the Black Prince. It has 150 hit points. If any character still has figurines the urge will come again, and again. If the Black Prince is destroyed, an explosion of black energy is emitted from it, killing everything living on the cave floor, except Sir Peter Talbot. He is instead sucked into the energy ball and disappeared. Then, the mountain itself starts to crumble, time to run.

THE END

Please Donate!

Now when you have played this adventure, please consider donating.

http://4eyes.code66.se/

The Telegram

POST OFFICE

TELEGRAM

April 30

INVITATION: OPENLY FRIENDLY RECEPTION

You have been invited to attend a reception at the Chattenborough House, Eastleigh, Monday May 3 at 3 p.m. for afternoon tea. Tea will be served at 7 p.m. Overnight is compulsory, pack for a three week trip to warmer latitudes. Bring passport.

Transportation will be arranged, please contact my head of staff, Oscar Framham - Rowlington, Eastleigh 127 by telephone to make travel arrangements.

Yours sincerely
Lady Winterbottom - Stokes

Orientation map

Aden - GM map

Only buildings around the actual track are shown, the city is much larger.

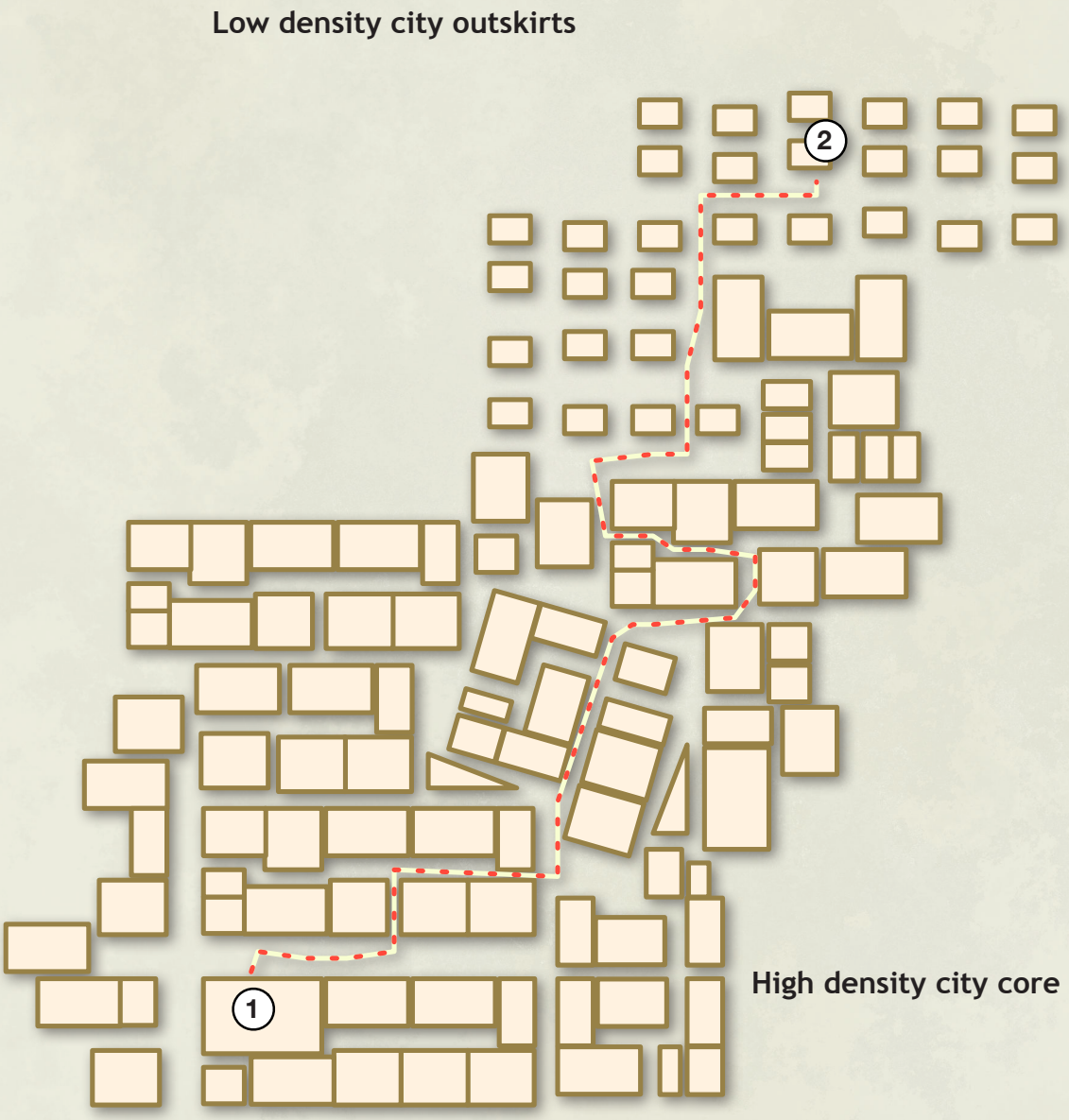

Map legends:
(1) The Excelsior Hotel
(2) The ransom house

The ransom house in Aden - GM map

Ground floor

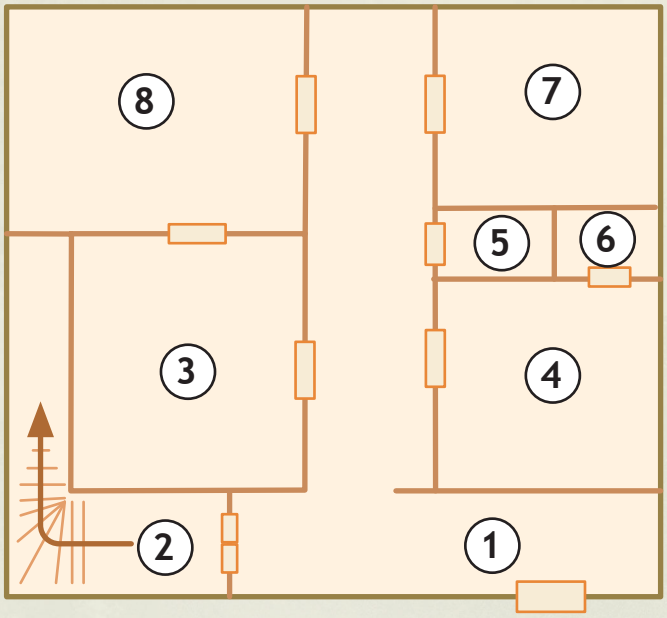

Basement

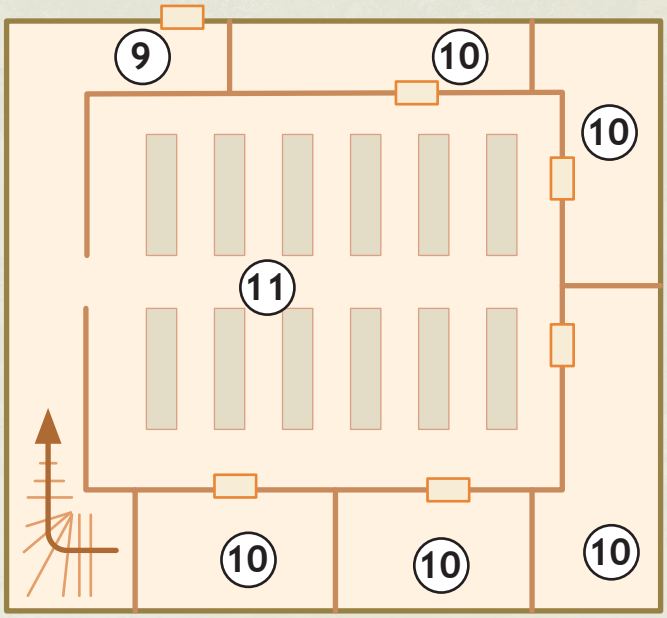

The Iron Figurine

The letter - Untranslated

Ipsum dolor sit amet, consectetur ad ipisicing Tommy, sed do eiusmod tem incididunt ut labore et dolore magna aliqua. Ut enim minim veniam, quis nostrud.

- Hans

The letter - Translated

We have to watch out. We cannot thrust the Tommy, his temperament will be our doom. We have to get rid of him when we have found the Prince.

- Hans
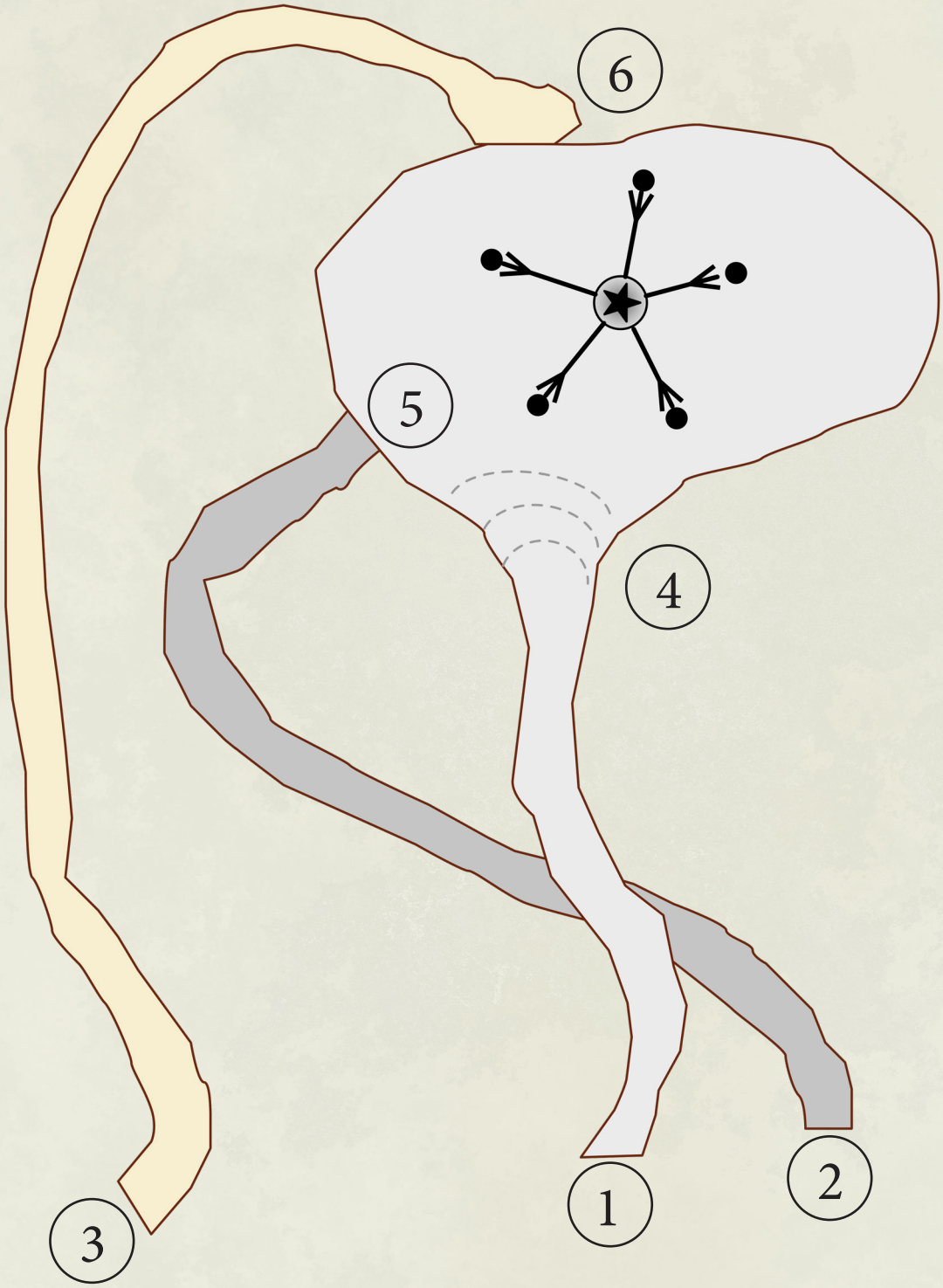
Shaitaan Ka Munh